REVISIONS				
ZONE	REV	DESCRIPTION	DATE	APPROVED
	P01	PRELIMINARY RELEASE	05/06/2023	
	A	RELEASE TO PRODUCTION PER ECN 225356	05/06/2023	

NOTES: UNLESS OTHERWISE SPECIFIED.

1. ASSEMBLY SHALL BE HANDLED IN ACCORDANCE WITH STANDARD ESD PRACTICE.
2. CONNECTOR INTERFACE: MOLEX SOCKET P/N 105028-101, EM-105028-201 OR EQUIVALENT. FOR PIN OUT DESIGNATIONS SEE LEPTON CAMERA USERS MANUAL.
3. PREFERRED MOUNTING AND ALIGNMENT SURFACES FOR CAMERA BORESIGHT.

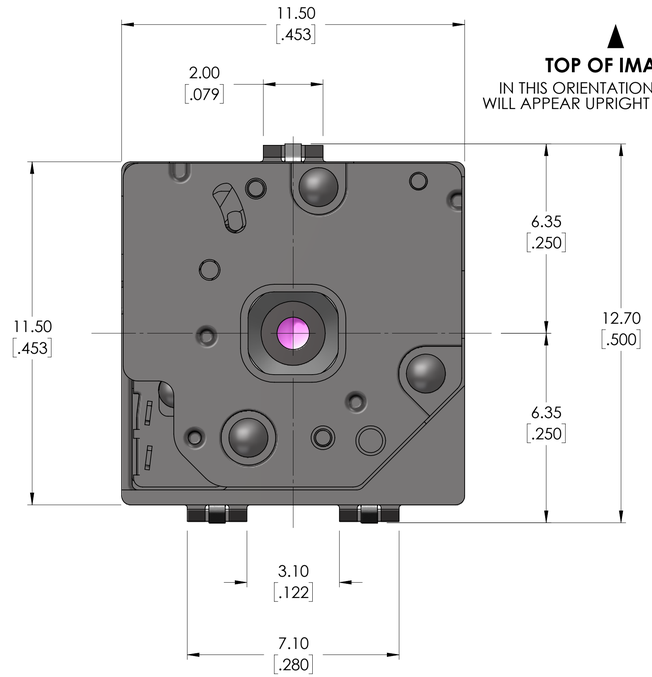

TOP OF IMAGE
IN THIS ORIENTATION, THE IMAGE WILL APPEAR UPRIGHT AND NORMAL

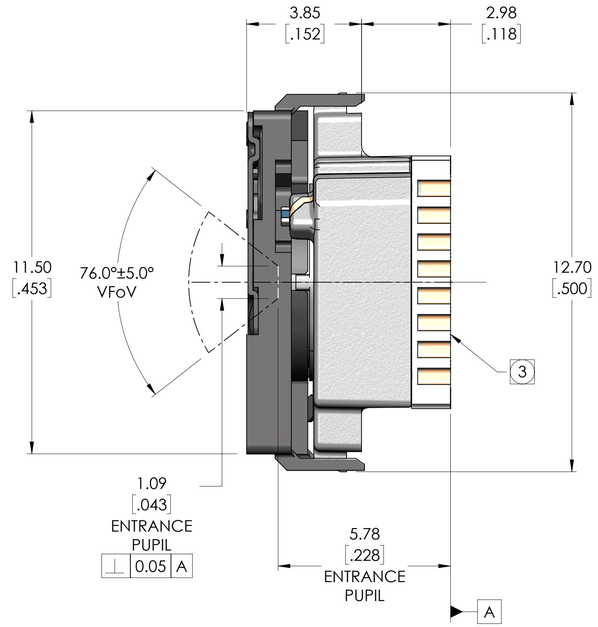

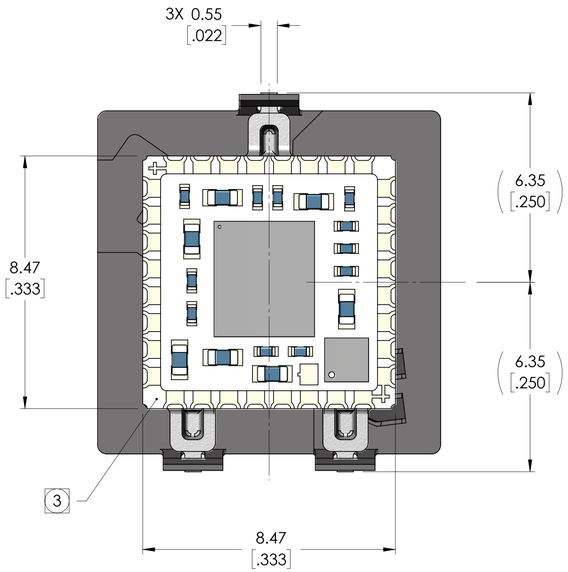

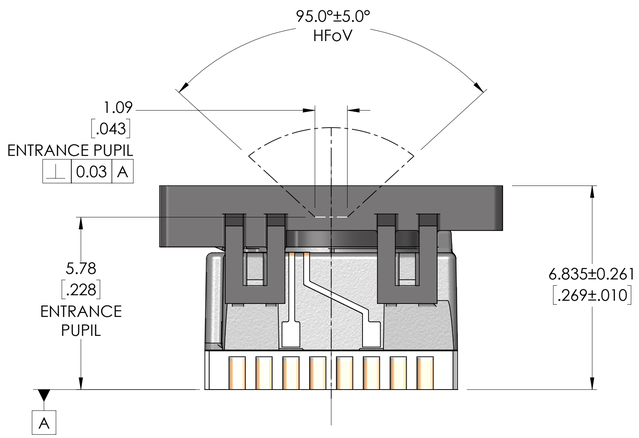

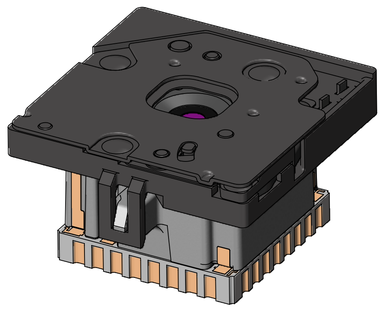

LEPTON 3.1R SENSOR ASSY WITH SHUTTER



THIRD ANGLE PROJECTION

METRIC

INTERPRET DRAWING PER ASME Y14.5M-1994

UNLESS OTHERWISE SPECIFIED
SURFACE ROUGHNESS 32
.X = ±.25
.XX = ±.13
ANGULAR = ±.5°
FILLET RADII = .13 MAX

PROPRIETARY - TELEDYNE FLIR, LLC

THIS DOCUMENT CONTAINS PROPRIETARY INFORMATION TO TELEDYNE FLIR, LLC. THIS INFORMATION MAY BE MAINTAINED IN CONFIDENCE AND USED ONLY IN A MANNER CONSISTENT WITH THE DOCUMENT AND ANY EXECUTED NON-DISCLOSURE AGREEMENT AND MAY NOT BE DISCLOSED TO ANY THIRD PARTIES WITHOUT TELEDYNE FLIR'S WRITTEN CONSENT.

THIS DOCUMENT DOES NOT CONTAIN ANY EXPORT-CONTROLLED INFORMATION.

MATERIAL

FINISH

UNLESS OTHERWISE SPECIFIED ALL MEASUREMENTS ARE IN MM. ALL DIMENSIONS IN [ ] ARE INCHES. DO NOT SCALE DRAWING.

CALC WT:

PROJECT NO.

APPROVALS		DATE
DWN	COVINGTON	07/05/23
CHK		
DSGN		
ENG		
APP		

TELEDYNE FLIR
Teledyne FLIR, LLC
6769 Hollister Ave.
Goleta, CA 93117

TITLE
IDD, LEPTON 3.1R, 160x120 95 DEG SHUTTERED, 9 HZ

SIZE D | CAGE 064Y2 | DWG NO. **500-0758-41** | REV A

SCALE 10:1 | PRINTED: 7/7/2023 | SHEET 1 OF 3

SOLIDWORKS MODEL: 500-0758-03 Lepton 3.1, 160x120 95° Room Shutr 9 Hz.
MODEL REVISION: A

DWG NO. 500-0758-41 SH 1 REV A

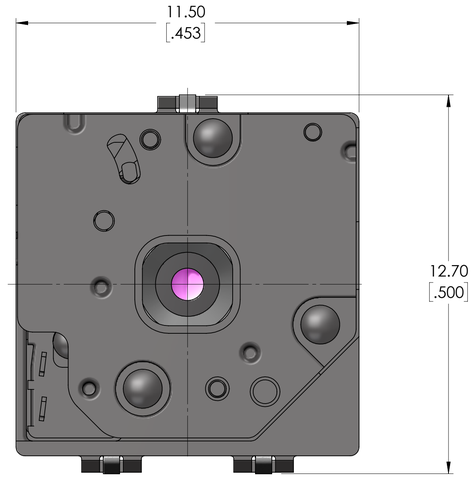

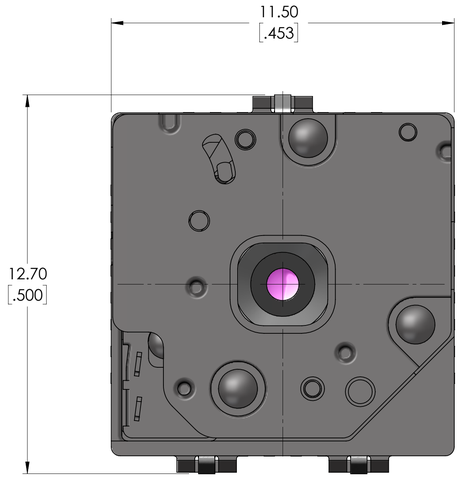

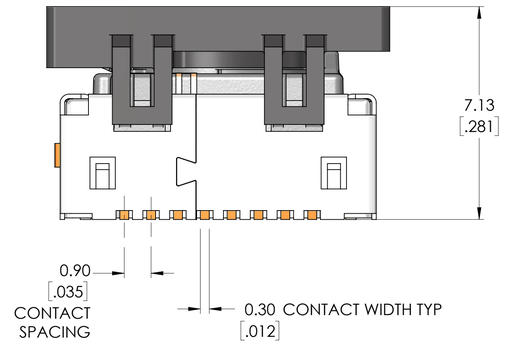

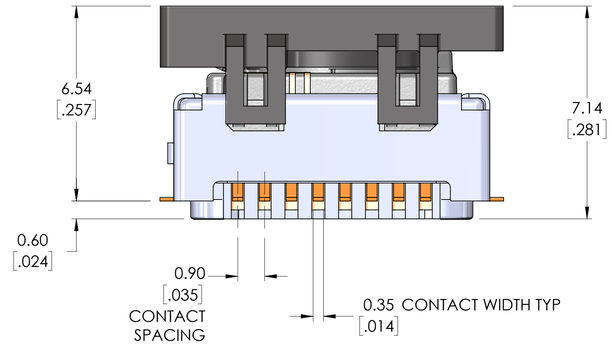

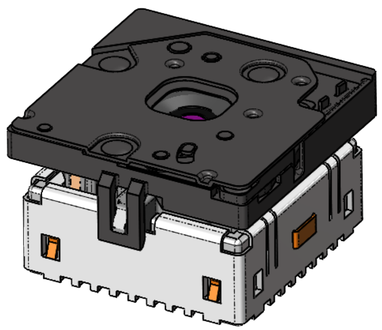

MOLEX SOCKET 8.5x8.5
P/N 1050281001

2

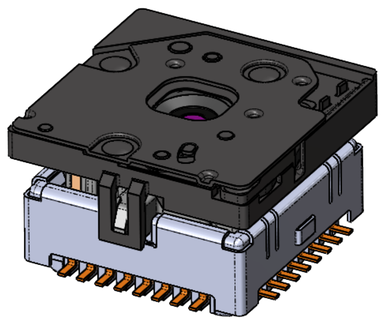

MOLEX SOCKET 8.5x8.5
P/N 1050282031

2



LEPTON 3.1R, 160x120, 95° SHUTTERED 9Hz

METRIC

PROPRIETARY - TELEDYNE FLIR, LLC

THIS DOCUMENT DOES NOT CONTAIN ANY EXPORT-CONTROLLED INFORMATION.

TELEDYNE FLIR
Teledyne FLIR LLC
6769 Hollister Ave
Goleta, CA 93117

SIZE	CAGE	PIECE PART.	REV
D	064Y2	500-0758-41	A

SCALE 10:1 | PRINTED: 7/7/2023 | SHEET 2 OF 3

SOLIDWORKS MODEL: 500-0758-03 Lepton 3.1, 160x120 95° Radio Shutr 9Hz.
MODEL REVISON: A

DWG NO. 500-0758-41 SH 2 REV A

TOP OF IMAGE DISPLAYED

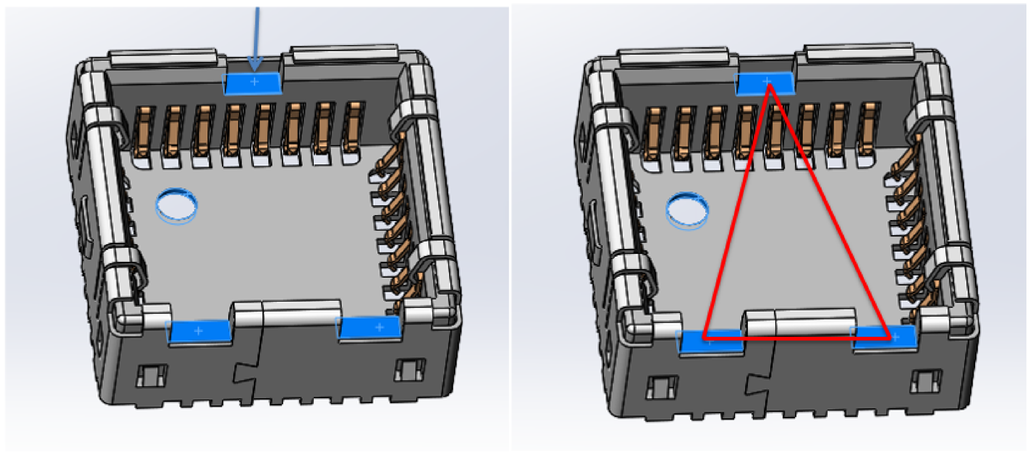

SOCKET IMAGE ORIENTATION

LEPTON 3.1R WITH MOLEX SOCKET 1050282031
EXPLOADED VIEW AND MOUNTING DISPLAY

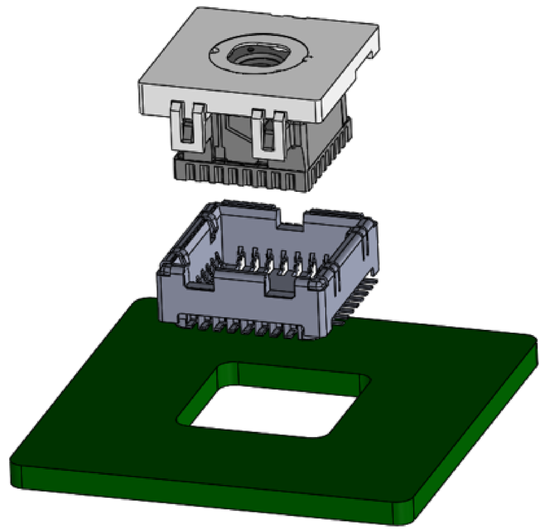

BLUE HIGHLIGHTED AREAS ARE SAFE TO PUSH ON

RED RECTANGLES ARE MOVING PARTS THAT CANNOT BE PUSHED ON. IT WILL JAM THE SHUTTER PADDLE LOCATED UNDERNEATH THE COVER PLATE.

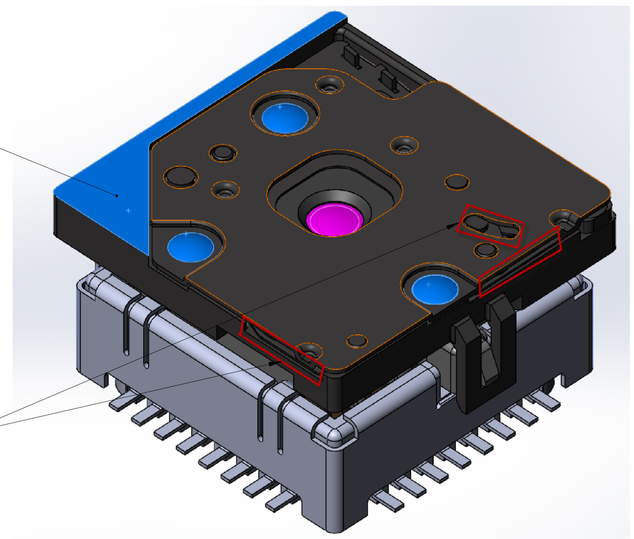

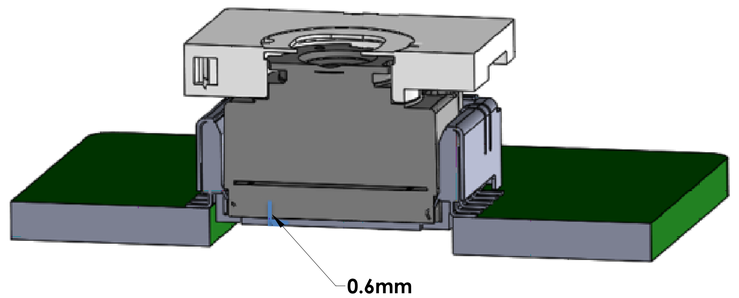

IDD, LEPTON 3.1R, 160x120
95 DEG SHUTTERED, 9 HZ

METRIC

PROPRIETARY - TELEDYNE FLIR, LLC

THIS DOCUMENT DOES NOT CONTAIN ANY EXPORT-CONTROLLED INFORMATION.

TELEDYNE FLIR
Teledyne FLIR LLC
6769 Hollister Ave
Goleta, CA 93117

SIZE	CAGE	PIECE PART.	REV
D	064Y2	500-0758-41	A

SCALE 10:1 | PRINTED: 7/7/2023 | SHEET 3 OF 3

SOLIDWORKS MODEL:
MODEL REVISON:

DWG NO. 500-0758-41 SH 3 REV A